Rapidity Solutions

Entry System Connection Diagram

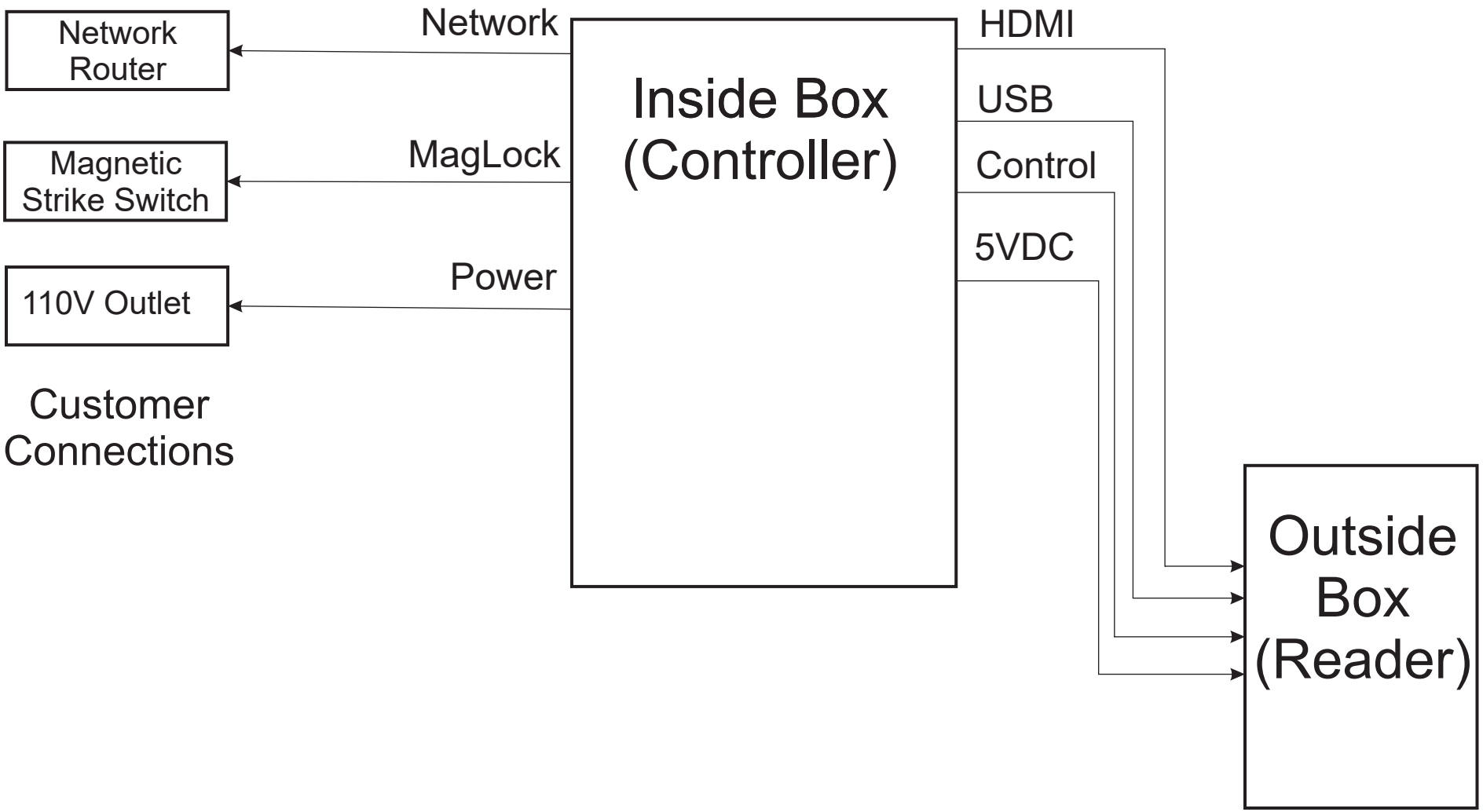

Revised 11/18/2026